Temperature Indicator

■ Features

- Various size as DIN specifications
  (W48×H24, W72×H36, W96×H48, W48×H48, W48×H96, W72×H72, W96×H96mm)

⚠ **Please read "Safety Considerations" in operation manual before using.**

■ Ordering Information

T 3 S I - N 4 N P 4 C - N

New※1	N	New type
Temperature unit	C	℃
Temperature range※3	0	-99.9 to 99.9, -99 to 199℃, -99.9 to 199.9℃
	1	0 to 99.9℃
	2	0 to 200℃
	4	0 to 400℃
	5	0 to 500℃
	8	0 to 800℃
	A	0 to 999℃
	C	0 to 1200℃
	F	600 to 1600℃
Input type※3	P	DPt100Ω
	J	J(IC)
	K	K(CA)
	R	R(PR)
Control output	N	Indicator
Power supply	X	12-24VDC
	4	100-240VAC 50/60Hz
Control method	N	Indicator
Alarm/Sub output	I	Indicator
Size	N	DIN W48×H24mm
	Y	DIN W72×H36mm
	W	DIN W96×H48mm
	S	DIN W48×H48mm (8-pin plug type)※2
	H	DIN W48×H96mm
	M	DIN W72×H72mm
	L	DIN W96×H96mm
Digit	3	999 (3-digit)
	4	9999 (4-digit)
Item	T	Temperature Controller

※1: Name plate and connections are different from previous T3/T4 Series.
※2: Sockets (PG-08, PS-08(N)) are sold separately.

※3: Input type and temperature range by Series

Input type			Series / Model	T3NI	T4YI, T4WI	T3SI	T3HI	T4MI, T4LI
Thermocouples	K(CA)	0 to 200℃	2	●	-	-	-	-
		0 to 400℃	4	●	-	-	-	-
		0 to 800℃	8	●	-	●	-	●
		0 to 999℃	A	●	-	-	●	-
		0 to 1200℃	C	-	●	-	-	●
	J(IC)	0 to 200℃	2	●	-	-	-	-
		0 to 400℃	4	●	-	●	●	●
		0 to 500℃	5	●	●	-	-	-
	R(PR)	600 to 1600℃	F	-	-	-	-	●
RTD	DPt 100Ω	-99.9 to 99.9℃	0	●	-	-	-	-
		-99.9 to 199.9℃	0	-	●	-	-	●
		-99 to 199℃	0	-	-	-	●	-
		0 to 99.9℃	1	●	-	●	-	-
		0 to 200℃	2	●	-	-	-	-
		0 to 400℃	4	●	●	●	●	●

※Please contact us for temperature unit ℉ model.

■ Specifications

Series		T3NI	T4YI	T4WI	T3SI	T3HI	T4MI	T4LI
Power supply		12-24VDC⎓	100-240VAC～ 50/60Hz					
Allowable voltage range		90 to 110% of rated voltage						
Power consumption		Max. 1W	Max. 3VA					
Display method		7-segment (red) LED method						
Character size (W×H)		3.8×7.6mm	8.0×14.2mm		3.8×7.6mm	6.0×10.0mm		8.0×14.2mm
Input type	RTD	DPt100Ω (allowable line resistance max. 5Ω per a wire)						
	TC	K(CA), J(IC)					K(CA), J(IC), R(PR)	
Display accuracy※1	RTD / TC	●At room temperature (23ºC ± 5ºC): (PV ± 0.5% or ±1ºC, select the higher one)±1-digit ●Out of room temperature range: (PV± 0.5% or ±2ºC, select the higher one)±1-digit						
Sampling period		100ms						
Dielectric strength		1,000VAC 50/60Hz for 1 min (between input terminal and power terminal)	2,000VAC 50/60Hz for 1 min (between input terminal and power terminal)					
Vibration		0.75mm amplitude at frequency of 10 to 55Hz (for 1 min) in each X, Y, Z direction for 2 hours						
Insulation resistance		Over 100MΩ (at 500VDC megger)						
Noise immunity		Square-wave noise by noise simulator (pulse width 1μs) ±500V R-phase and S-phase	Square-wave noise by noise simulator (pulse width 1μs) ±2kV R-phase and S-phase					
Environ-ment	Ambient temp.	-10 to 50℃, storage: -20 to 60℃						
	Ambient humi.	35 to 85% RH, storage: 35 to 85% RH						
Weight※2		Approx. 48g (approx. 25g)	Approx. 181g (approx. 123g)	Approx. 231g (approx. 140g)	Approx. 120g (approx. 80g)	Approx. 203g (approx. 137g)	Approx. 202g (approx. 137g)	Approx. 274g (approx. 185g)

※1: In case of the T3NI, T3SI Series and the decimal point display models
At room temperature (23ºC±5ºC): (PV ±0.5% or ±2℃, select the higher one)±1-digit
Out of room temperature range: (PV ±0.5% or ±3℃, select the higher one)±1-digit
※2: The weight includes packaging. The weight in parenthesis is for unit only.
※Environment resistance is rated at no freezing or condensation.

■ Connections

※Use teminals of size specified below.

	 <Round>	 <Forked>
a	Min. 3.5mm	Min. 3.5mm
b	Max. 7.2mm	Max. 7.2mm

• **T3NI**

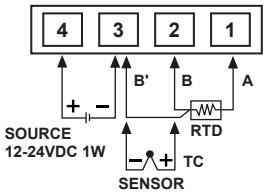

• **T4YI**

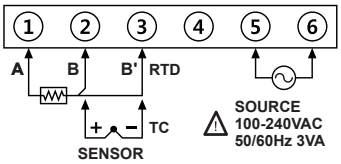

• **T4WI**

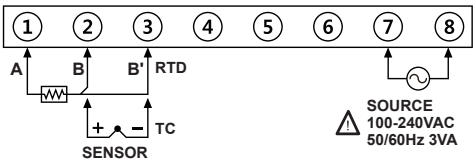

• **T3SI**

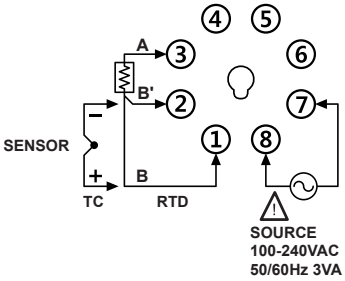

• **T4MI**

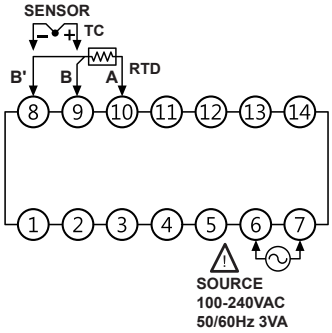

• **T3HI, T4LI**

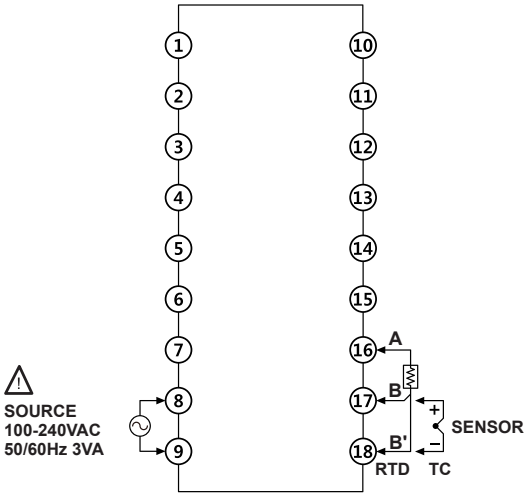

■ Dimensions

(unit: mm)

• **T3NI**

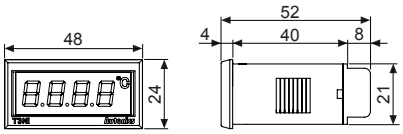

• **T4YI**

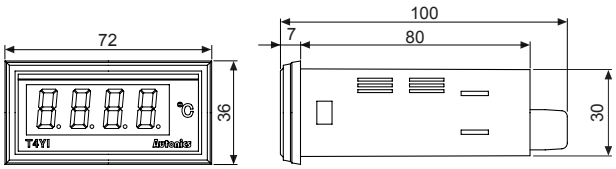

• **T4WI**

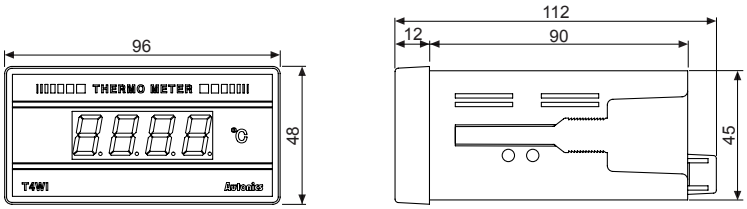

• **T3SI**

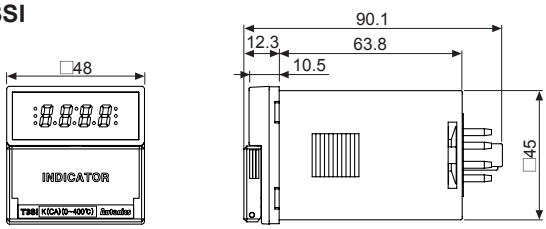

• **T3HI**

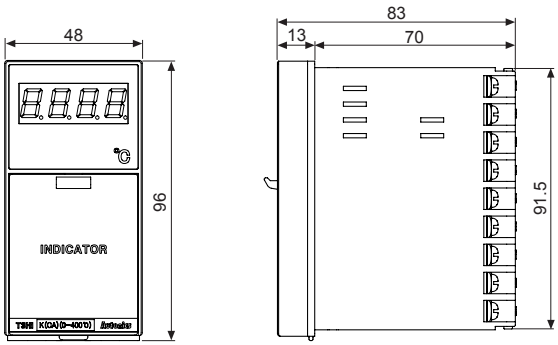

● **T4MI**

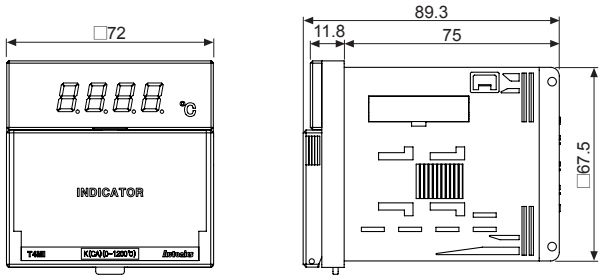

● **T4LI**

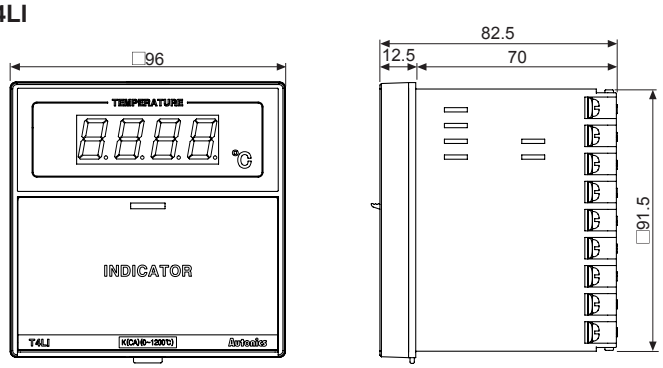

● **Bracket** (unit: mm)

●T3NI Series

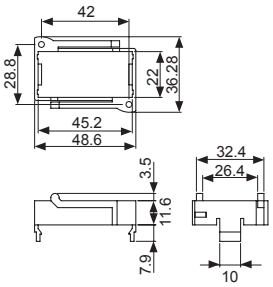

●T4YI Series

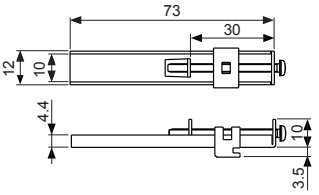

●T4WI Series

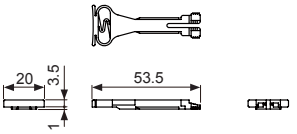

●T3SI Series

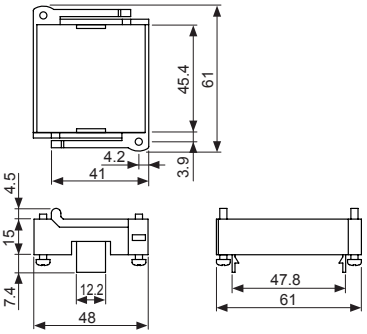

●T3HI/T4MI/T4LI Series

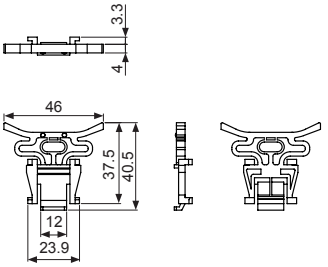

● **Terminal cover (sold separately)**

(unit: mm)

●RMA-COVER (72×72mm)

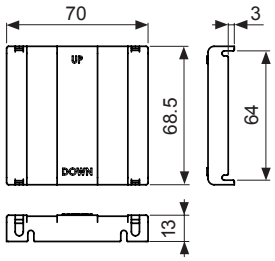

●RLA-COVER (96×96mm)

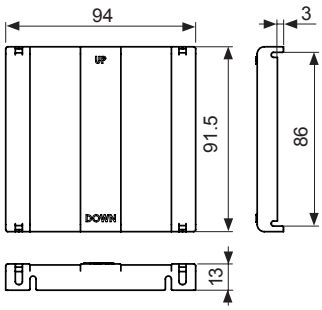

●RHA-COVER (48×96mm)

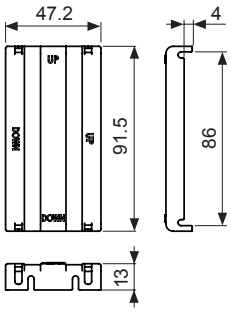

●**Panel cut-out**

(unit: mm)

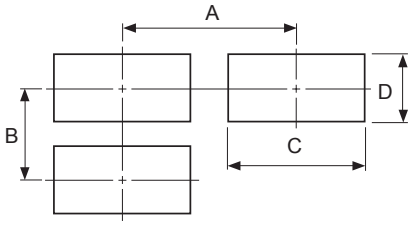

Series \ Size	A	B	C	D
T3NI	Min. 55	Min. 37	$45^{+0.5}_{0}$	$22.2^{+0.3}_{0}$
T4YI	Min. 91	Min. 40	$68^{+0.7}_{0}$	$31.5^{+0.6}_{0}$
T4WI	Min. 116	Min. 52	$92^{+0.8}_{0}$	$45^{+0.6}_{0}$
T3SI	Min. 65	Min. 65	$45^{+0.6}_{0}$	$45^{+0.6}_{0}$
T3HI	Min. 65	Min. 115	$45^{+0.6}_{0}$	$92^{+0.8}_{0}$
T4MI	Min. 90	Min. 90	$68^{+0.7}_{0}$	$68^{+0.7}_{0}$
T4LI	Min. 115	Min. 115	$92^{+0.8}_{0}$	$92^{+0.8}_{0}$

■ Display When Power Is ON

When power is supplied, whole display parts turn ON for 1 sec. It displays model type (digits, size, alarm/sub output and control output, sensor, temp. range, unit). Afterward, it returns to RUN mode.

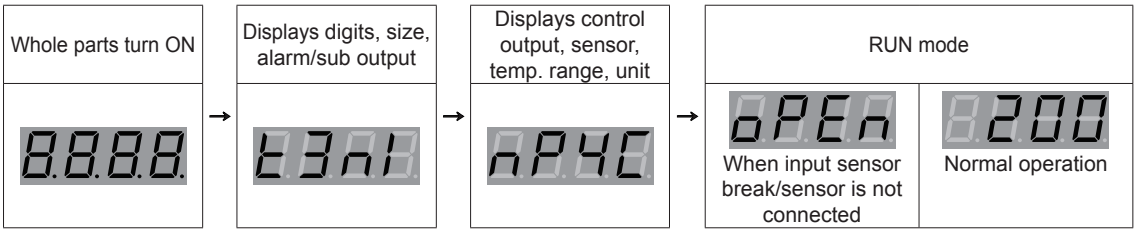

When input sensor break/sensor is not connected, it displays [oPEn].
In case of normal operation, it displays the present input temperature.

■ Error Display

Display	Description	Troubleshooting
oPEn	Flashes when a temperature sensor is broken or not connected.	Check the status of the temperature sensor. When the sensor is connected correctly, it is clear.
HHHH	Flashes when the measured input value is higher than the temperature range of the sensor.	When the measured temperature is within the temperature range of the sensor, it is clear.
LLLL	Flashes when the measured input value is lower than the temperature range of the sensor.	