TRUEYES Inc.

Teaching Photoelectric Sensor KET91

Direct diffuse + Mirror diffuse & Point detection in ONE Unit.

Ease of setting with simple teaching button.

Perfect water proof IP67 design

Caution for your safety

※ Please keep these instructions and review them before using this unit.
※ Please observe the cautions that follow; Warning : Serious injury may result if instructions are not followed. Caution : Product may be damaged, or injury may result if instructions are not followed.
The following is an explanation of the symbols used in the operation Caution : Injury or danger may occur under special conditions.

Warning

1. When use this unit for controlling highly affective machinery to human or properties (medical equipment, vehicle, train, airplane, combustion apparatus and entertainment etc.), it is required to install fall-safe device. It may cause serious human injury or a fire, property.
2. Please observe voltage rating. It may shorten the life cycle or damage to the product.
3. Please check the polarity of power and wrong wiring. It may result in damage to this unit.

General Specification

Light Source (Wave Length)		Infrared LED (940 nm)			
Power Supply Voltage		12~24VDC ±10%			
Output Type		NPN+PNP NO/NC, , Modbus RS485 (optional)			
Sensing Method		Direct diffuse		Retro reflective diffuse	
Sensing Distance		Area Teaching	Point teaching	Area Teaching	Point teaching
		1M	0.8M	15M	13M
Current Consumption		20mA			
Circuit Protection		Protection from reversed power supply Cable outlet , output short-circuit, mutual interference, and reversed output Cable outlet			
Sensing mode		Teaching button type (ⒶArea detection ⒫oint detection)			
Maximum Response Frequency		5ms			
Material	Case	Fire retardant ABS			
	Window	PMMA			
Control Output	Load Current	Max. 200mA			
	Residual Voltage	1VDC			
Cable Outlet		2m Cable(5 Line)			
Ambient Illumination		Incandescent lamp : Max. 3,000 lx Sunlight : Max. 100,000 lx(Receiver Side)			
Ambient Temperature		Operating : -25°C to 55°C / Storage : -40°C to 70°C (with no icing)			
Ambient Humidity		Operating : 35% to 85% / Storage : 35% to 95% (with no icing)			
Dielectric Strength		1,000 VAC, 50/60 Hz for 1 min between charged parts and case			

Vibration Resistance	Destruction : 10 to 55 Hz, 1.5-mm double amplitude or 300 m/s2 for 2 hours each in X, Y, and Z directions
Shock Resistance	Destruction : 500 m/s2 3 times each in X, Y, and Z directions
Degree of Protection	IP67
Indicator Operation	RED LED : Object detecting GREEN LED : Area Teaching YELLOW LED : Point teaching

User guide

Key configuration

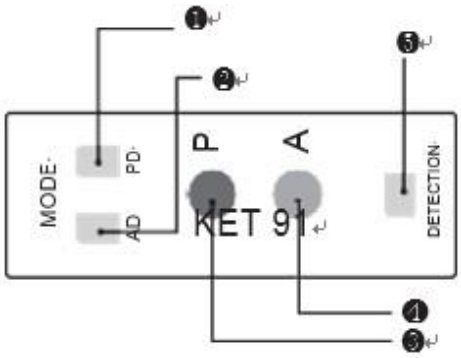

No.	Part	Operation
❶	Yellow LED(PD)	Point detection mode LED
❷	Green LED(AD)	Area detection mode LED
❸	Gray Key	Point teaching button
❹	Blue Key	Area Teaching button
❺	Red LED (Detection)	Detection LED

Connection Diagram

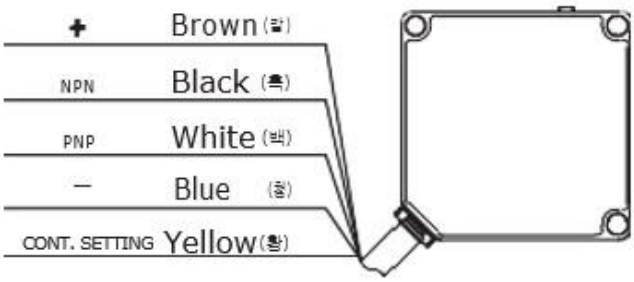

- Light on (NO) : Open between yellow control line and Blue)(line (Default
- Dark on (NC) : Connect yellow control line to Blue (line

	Light On	Dark On
Direct diffuse	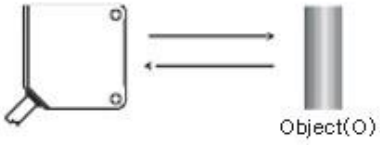	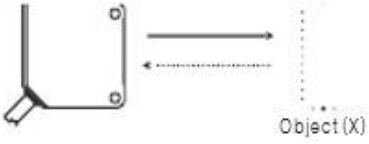
Retro reflective diffuse	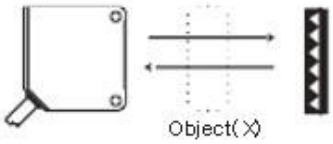	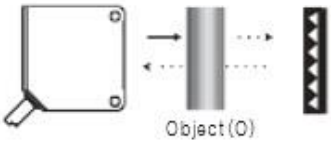

Detection range

Direct diffuse		Retro reflective diffuse	
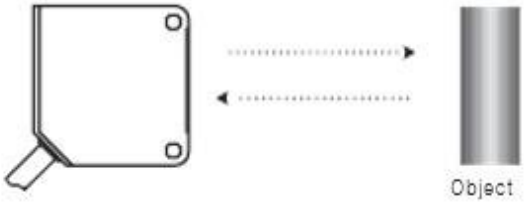		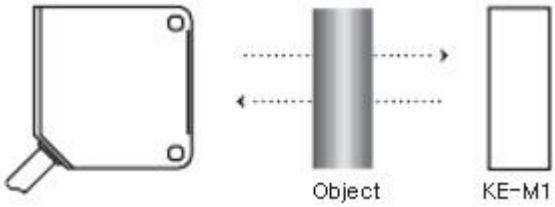	
Sensing Distance	Point teaching : 0.1 ~ 0.8m	Sensing Distance	Point teaching : 1 ~ 13m
	Area Teaching : 0.1 ~ 1m		

This sensing distance can replace 'through beam type' typical photo sensor

HOW TO SET

※ Precaution for Teaching

- If object or KET91 is not fixed when it is teaching process, the proper sensing operation is not working well.

- If KET91 is teaching over rated sensing distance, teaching process would not be done or operation with more than 30cm off-set distance.

Point teaching

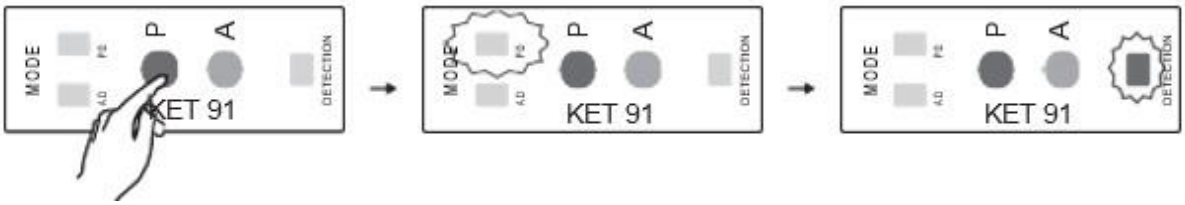

1. Press GRAY (P) KEY 3sec till PD LED 2. When the setting is finished., PD LED is stay and detection is flickering RED LED is on after flickering

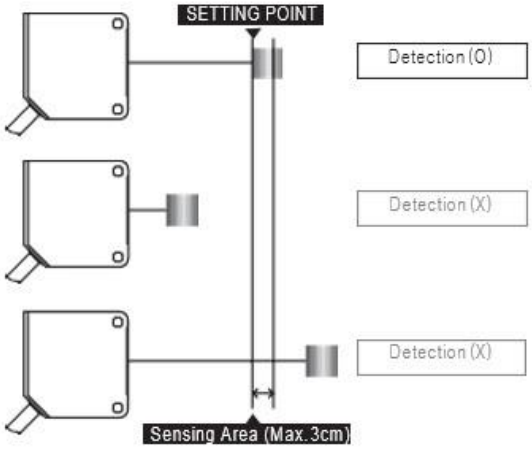

※ It detects at teaching point only

※ Caution

- Point detection is checking difference of reflectiveness for distinguishing object. So if detecting side is changed, point teaching should be done again for new detection side.
- If you are using retro reflective or background for object detection, Control line should be connected to GND for retro reflective Dark on operation.
- If you are using background as a reflector, the background should not be changed color and non vibration during sensing operation.

• Area Teaching

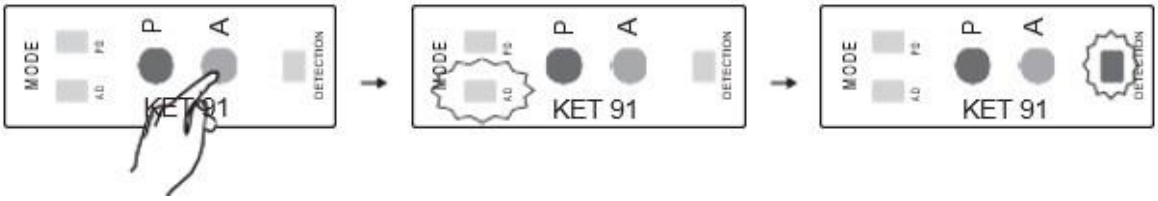

1. Please press 'A' button 3 sec teaching

2. AD LED is flickering than detection LED is on or off when process is done

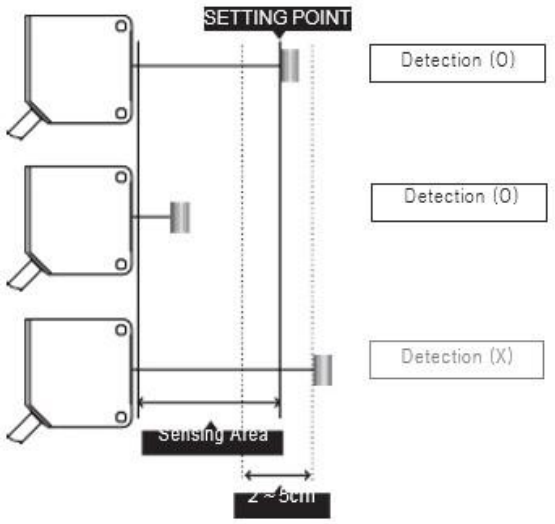

It detects from sensor to teaching point

Detection performance

Glossy color Non Glossy color

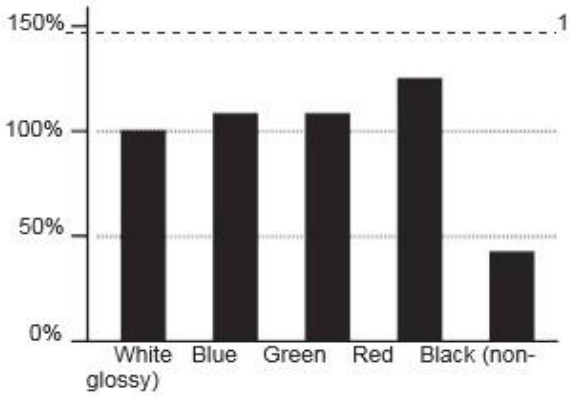

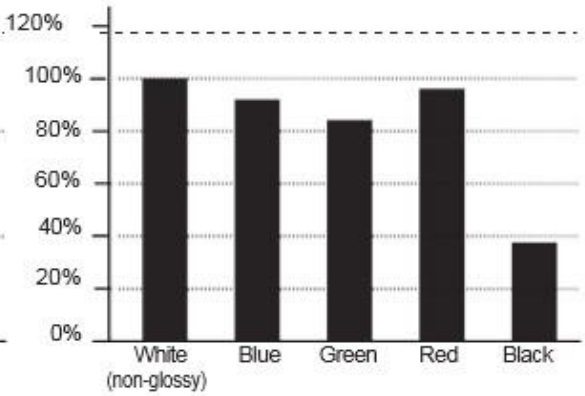

Off-set for detecting area

- KET91 is checking reflectiveness of object so that if the detecting area is changed up to 30 ~ 50% based on 10 X 10cm white paper, KET91 should be re-teaching for new detecting area.

Dimension

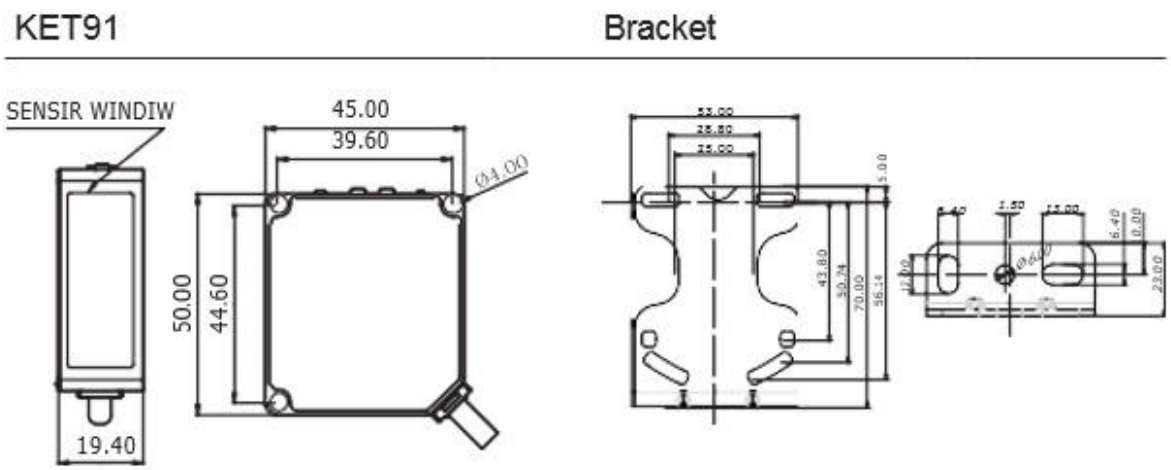

Mirror

KE-M1 (Standard)

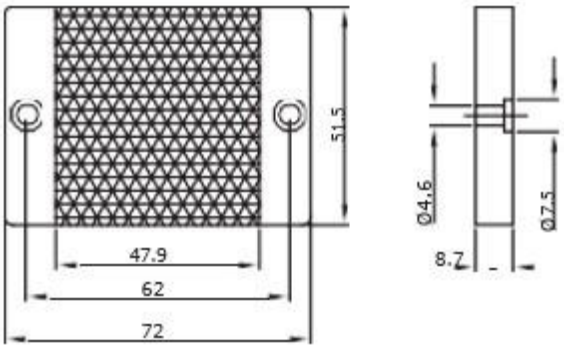

KE-M2(Optional)

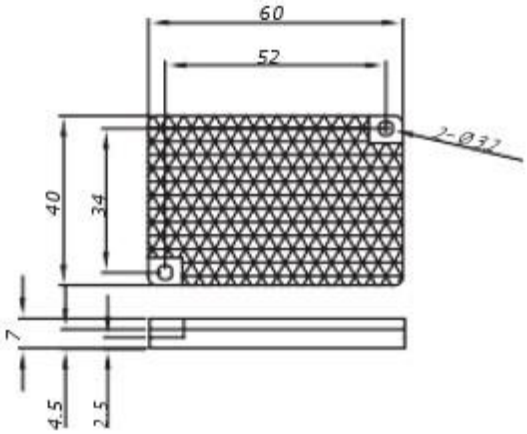

KE-M3(Optional)

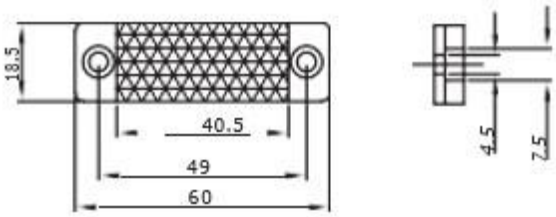

KE-M4(Optional)

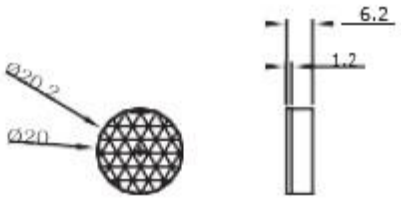

Precaution

Minimum distance between sensors.

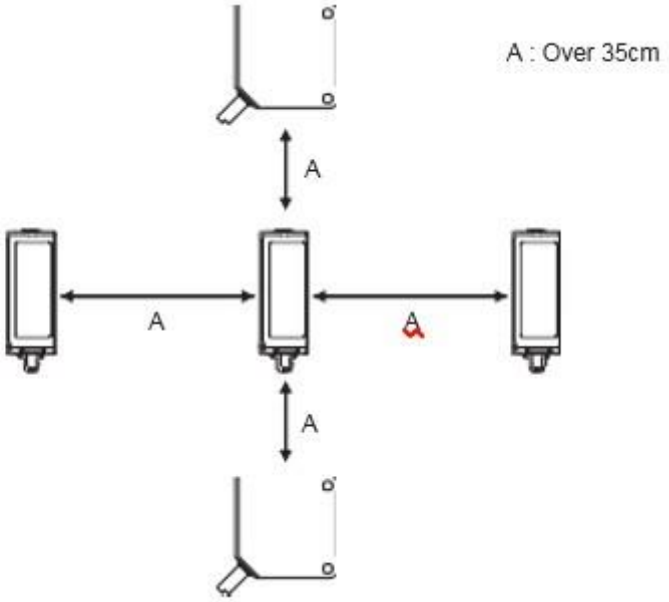

Mirror mounting guide

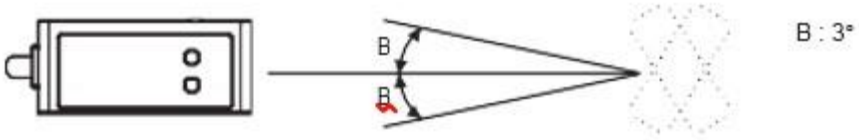

Please fix the mirror not moving angle after teaching process.

Wiring Instruction

Power Supply Voltage	Load short-circuiting

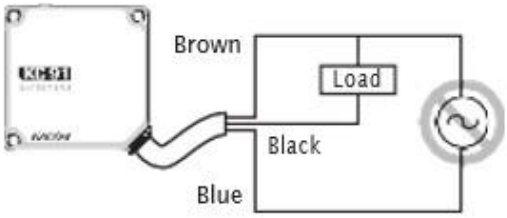

Do not use a voltage that exceeds the operating voltage range. Applying a voltage that is higher than the operating voltage range, or using an AC power supply (100 VAC or higher)for a Sensor that requires a
DC power supply may cause explosion or burning

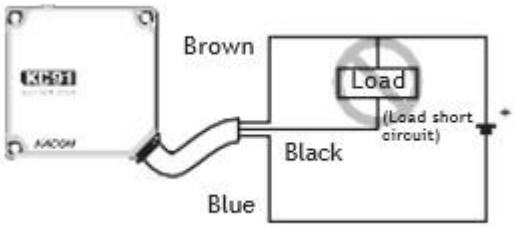

Do not short-circuit the load. Explosion or burning may result.

- The load short-circuit protection function operates when the power supply is connected with the correct polarity and the power is within the rated voltage range.

NPN Incorrect Wiring

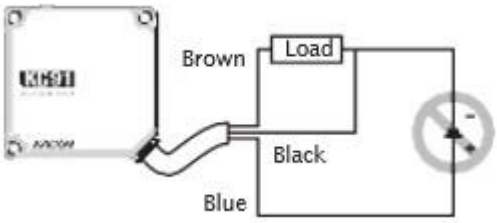

PNP Incorrect Wiring

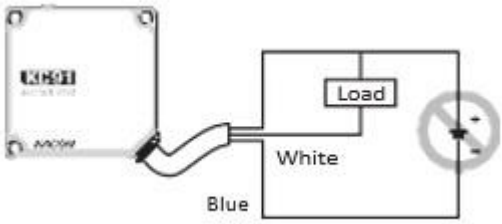

Be sure that the power supply polarity and other wiring is correct. Incorrect wiring may cause explosion or burning.

Precaution for Safe use

Power Reset Time

The Sensor is ready to operate after output signal when the power is connected.

If the load and Sensor are connected to independent power supplies respectively. Please be sure to turn

ON the Sensor before turning the load ON

Mounting

Use M4 screws to mount the sensor and tighten each screw to a maximum torque of 0.5 N • m.

Cable

The cable material is normal PVC so it may not suitable for oil resistance and regular moving circumstance